"APPROVED FOR RELEASE: 08/23/2000 CIA-RDP86-00513R000929510010-4

Ch. XII. Methods and Equipment for Checking Cutting Tools 220
1. Checking basic dimensions 220
2. Checking of sharpened tools 227

Ch. XIII. Statistical Method of Quality Control 239

Ch. XIV. Gear Inspection Methods and Equipment 255
1. Checking base and circular pitches 259
2. Checking tooth profiles 263
3. Checking tooth thickness 267
4. Checking length of common normal [Black gaging method] 270
5. Checking radial play of gear teeth 272
6. Measurement of helical lead 274
7. Master-gear and Dial-indicator Method 277
8. Running inspection under simulated operating conditions 286
9. Inspection of bevel gears 288

Ch. XV. Inspection Devices 293

APPROVED FOR RELEASE: 08/23/2000 CIA-RDP86-00513R000929510010-4"

"APPROVED FOR RELEASE: 08/23/2000 CIA-RDP86-00513R000929510010-4

Ch. XVI. Hardness Testing Machines 306
1. Static indentation hardness-test methods 306
2. Dynamic hardness-test methods 315

Ch. XVII. Surface Roughness Inspection Methods 320
1. Contactless instruments [interferometers and microscopes] 322
2. Direct-contact instruments (profilographs) 327
3. Subjective methods of inspection [Tactual and visual comparison methods 337

Bibliography 340

AVAILABLE: Library of Congress GO/lsb
2-24-59

APPROVED FOR RELEASE: 08/23/2000 CIA-RDP86-00513R000929510010-4"

"APPROVED FOR RELEASE: 08/23/2000 CIA-RDP86-00513R000929510010-4

SOV-117-58-9-22/22

AUTHOR: Levenson, Ye.M., Engineer

TITLE: Review (Retsenziya)

PERIODICAL: Mashinostroitel', 1958, Nr 9, p 48 (USSR)

ABSTRACT: This is a critical review of a book by V.S. Vikhman published in 1957, entitled "Electro-Automation of Technical Control of Machine-Building Production".

1. Machine tools--Production 2. Machine tools--USSR

Card 1/1

USCOMM-DC-55523

APPROVED FOR RELEASE: 08/23/2000 CIA-RDP86-00513R000929510010-4"

"APPROVED FOR RELEASE: 08/23/2000 CIA-RDP86-00513R000929510010-4

GRIGOR'YEV, Ivan Andreyevich; DVORETSKIY, Yevgeniy Romanovich; LEVENSON, Ye.M., inzh., retsenzent; GORODETSKIY, I.Ye., prof., doktor tekhn. nauk, red. [deceased]; MOROZOVA, M.N., inzh., red.; MODEL', B.I., tekhn.red.; EL'KIND, V.D., tekhn.red.

[Control of dimensions in machinery manufacture; handbook] Kontrol' razmerov v mashinostroenii; spravochnoe posobie. Pod red. I.E.Gorodetskogo. Moskva, Gos.nauchno-tekhn.izd-vo mashinostroit.lit-ry, 1959. 399 p. (MIRA 12:8)
(Machine-shop practice)

APPROVED FOR RELEASE: 08/23/2000 CIA-RDP86-00513R000929510010-4"

"APPROVED FOR RELEASE: 08/23/2000 CIA-RDP86-00513R000929510010-4

LEVENSON, Yevgeniy Mikhaylovich; MOROZOVA, M.N., red.izd-va; SMIRNOVA, G.V., tekhn.red.

[Checking and measuring devices used in the manufacture of machinery] Kontrol'no-izmeritel'nye prisposobleniia v mashinostroenii. Izd.2., perer. Moskva, Gos.nauchno-tekhn.izd-vo mashinostroit.lit-ry, 1960. 291 p. (MIRA 13:11)
(Gauges) (Measuring instruments)

APPROVED FOR RELEASE: 08/23/2000 CIA-RDP86-00513R000929510010-4"

"APPROVED FOR RELEASE: 08/23/2000 CIA-RDP86-00513R000929510010-4

TISHCHENKO, Oleg Fedorovich; MALOV, A.N., kand.tekhn.nauk, retsenzent; LEVENSON, Ye.M., inzh., red.; YELISEYEV, M.S., red.izd-va; CHERNOVA, Z.I., tekhn.red.

[Control measuring instruments used in the manufacture of machinery] Kontrol'no-izmeritel'nye pribory v mashinostroenii. Moskva, Gos. nauchno-tekhn.izd-vo mashinostroit.lit-ry, 1960. 311 p. (MIRA 13:9)

(Measuring instruments)

APPROVED FOR RELEASE: 08/23/2000 CIA-RDP86-00513R000929510010-4"

"APPROVED FOR RELEASE: 08/23/2000 CIA-RDP86-00513R000929510010-4

PHASE I BOOK EXPLOITATION SOV/4901

Levenson, Yevgeniy Mikhaylovich

Kontrol'no-izmeritel'nyye prisposobleniya v mashinostroenii (Devices for Dimensional Inspection in the Machine Industry) 2nd. ed., rev. Moscow, Mashgiz, 1960. 291 p. 12,000 copies printed.

Ed. of Publishing House: M.N. Morozova; Tech. Ed.: G.V. Smirnova; Managing Ed. for Literature on Metalworking and Machine-Tool Making: V.I. Mitin, Engineer.

PURPOSE: This book is intended for the following technical personnel of machine-building plants: process engineers, designers of inspection devices, and workers in technical control departments.

COVERAGE: The author discusses the classification of inspection devices and their subassemblies and makes certain recommendations for the design and operation of these devices. Various devices used in the acceptance inspection and in-process dimensional inspection of parts in lot and mass production are described. In preparing this book the author drew upon

~~Card 1/5~~

APPROVED FOR RELEASE: 08/23/2000 CIA-RDP86-00513R000929510010-4"

"APPROVED FOR RELEASE: 08/23/2000 CIA-RDP86-00513R000929510010-4

the experiences of the Soviet automobile industry, especially those of the Moskovskiy avtomobil'nyy zavod imeni Likhacheva (Moscow Automobile Plant imeni Likhachev). No personalities are mentioned. There are 18 references, all Soviet.

TABLE OF CONTENTS:

Foreword to the Second Edition 3

Ch. I. Fundamentals in the Design of Inspection Fixtures 5
1. Locating devices 9
2. Clamping devices 28
3. Measuring devices 35
4. Auxiliary devices of inspection fixtures 55

Ch. II. Fixtures for the Inspection of Blanks (Castings and Forgings) 70
1. Typical drawing of a blank 71
2. Inspection fixtures 71

~~Card 2/5~~

APPROVED FOR RELEASE: 08/23/2000 CIA-RDP86-00513R000929510010-4"

"APPROVED FOR RELEASE: 08/23/2000 CIA-RDP86-00513R000929510010-4

GIPP, B.A.; GONIKBERG, Yu.M.; KAPLUN, M.M.; LEVENSON, Ye.M.; MARKOV, N.N.; POLYANSKIY, P.M.; SHLEZINGER, G.S.; ~~LEVENSON, Ye.M.~~, nauchnyy red.; BAYBIROV, B.S., red.; KOCHENOV, M.I., red.; MALYY, D.D., red.; PROKOF'YEVA, L.G., red.izd-va; TIKHANOV, A.Ya., tekhn.red.

[Checking devices] Kontrol'nye prisposobleniia. Pod red. B.S. Baiburova, M.I.Kochenova i D.D.Malogo. Moskva, Gos.nauchno-tekhn. izd-vo mashinostroit.lit-ry, 1960. 338 p. (MIRA 13:12)

(Measuring instruments)

APPROVED FOR RELEASE: 08/23/2000 CIA-RDP86-00513R000929510010-4"

"APPROVED FOR RELEASE: 08/23/2000 CIA-RDP86-00513R000929510010-4

PHASE I BOOK EXPLOITATION SOV/5062

Gipp, B.A., Yu.M. Gonikberg, M.M. Kaplun, Ye. M. Levenson, N.N. Markov, P.M. Polyanskiy, and G.S. Shlezinger

Kontrol'nyye prisposobleniya (Inspection Equipment) Moscow, Mashgiz, 1960. 338 p. Errata slip inserted. (Series: Progressivnyye sredstva kontrolya razmerov v mashinostroyenii)

Scientific Ed.: Ye. M. Levenson; Ed. of Publishing House: L.G. Prokof'yeva; Tech. Ed.: A.Ya. Tikhanov; Eds. for the Series: B.S. Bayburov, M.I. Kochenov, and D.D. Malyy; Managing Ed. for Literature on Chemical- and Textile-Machine Building: V.I. Rybakova, Engineer.

PURPOSE: This book is intended for designers and technical personnel in the machine-building industry.

COVERAGE: The book discusses in detail the design of basic subassemblies and parts of inspection equipment which have proved valuable in shop practice. Various devices for the inspection of dimensional and nondimensional parameters of parts used in machine building are described. The book is a part of a group of works

~~Card 1/5~~

APPROVED FOR RELEASE: 08/23/2000 CIA-RDP86-00513R000929510010-4"

"APPROVED FOR RELEASE: 08/23/2000 CIA-RDP86-00513R000929510010-4

SOV/5062

Inspection Equipment

on modern means for inspection in manufacturing processes, the publication of which was recommended by the Commission for the Introduction of Progressive Methods and Means of Inspection in Machine Building of the State Scientific and Technical Committee of the Council of Ministers of the USSR. No personalities are mentioned. There are 27 references, all Soviet.

TABLE OF CONTENTS:

Introduction 5

PART I. ELEMENTS OF INSPECTION FIXTURES (Yu.M. Gonikberg) 13

Ch. I. Locating Means 13
1. Locating from a plane [of the machine part] 13
2. Locating from external cylindrical surface 16
3. Locating from internal cylindrical surface (hole) 23

Ch. II. Transmitting Devices 45
1. Direct transmitting devices 45
2. Lever-type transmitting devices 51

Card ~~2/5~~

APPROVED FOR RELEASE: 08/23/2000 CIA-RDP86-00513R000929510010-4"

"APPROVED FOR RELEASE: 08/23/2000 CIA-RDP86-00513R000929510010-4

LEVENSON, Ya.S., insh.

Causes for the collapse of the elements of industrial buildings under the conditions of a Siberian winter. Prom. stroi. 41 no.2:24-28 F '63. (MIRA 16:3)
(Siberia—Building—Cold weather conditions)

APPROVED FOR RELEASE: 08/23/2000 CIA-RDP86-00513R000929510010-4"

"APPROVED FOR RELEASE: 08/23/2000 CIA-RDP86-00513R000929510010-4

LEVENSTERN I. I. KOSTANDI, G. G.

"Design of Combined Receivers for Microwaves," Tr. Vses. N. -i. in-ta radioveshchat. priyema i akustiki, No 1, 1954 pp 35-50

Basic parameters of combined radio receivers for FM microwave signals are described. Schematic diagrams for modernization of these receivers are analyzed. The advantages of shot detectors for reception of FM signals are indicated.

RZhFiz, No 3, 1955

APPROVED FOR RELEASE: 08/23/2000 CIA-RDP86-00513R000929510010-4"

"APPROVED FOR RELEASE: 08/23/2000 CIA-RDP86-00513R000929510010-4

LEVENSTERN, I.
USSR/Electronics

Card 1/1

Authors : Kostandi, G., Levenstern, I. and Shteyert, L.

Title : Devices for Tuning Ultrashort-Wave Receivers

Periodical : Radio. 5, 57 - 61, May 1954

Abstract : The article describes several instruments used for regulating or tuning ultrashort-wave receiver units, and radio-outlet point adapters. The following equipment is described and the related circuit diagrams are shown: 1) a quartz oscillator for medium-frequency wave control; 2) an ultrashort-wave quartz oscillator; 3) a wide-band USW amplifier, and 4) a USW piezoelectric oscillator. The article also gives the description and the block diagram of the distribution network, indicating the position of points to be tested and tuned. Diagrams; tables.

Institution : ....

Submitted : ....

APPROVED FOR RELEASE: 08/23/2000 CIA-RDP86-00513R000929510010-4"

"APPROVED FOR RELEASE: 08/23/2000 CIA-RDP86-00513R000929510010-4

LEVENSTERN, I.

USSR/ Electronics - Triode amplifiers

Card 1/1 Pub. 89 - 19/30

Authors : Kostandi, G., and Levenstern, I.

Title : Triode amplifiers for meter waves

Periodical : Radio 3, 38 - 39, Mar 1955

Abstract : The technical factors involved in the amplification of short waves are analyzed, particularly, in reference to the use of triodes in the amplification of meter waves, the triode having been found to possess less sound of its own and high input resistance. The layouts of the circuits, grounding and other points are explained. Diagrams; table.

Institution : .....

Submitted : .....

APPROVED FOR RELEASE: 08/23/2000 CIA-RDP86-00513R000929510010-4"

"APPROVED FOR RELEASE: 08/23/2000 CIA-RDP86-00513R000929510010-4

KOSTANDI, G.; LEVENSTERN, I.

Metric wave frequency changer. Radio no.4:29-30 Ap '55. (MIRA 8:6)
(Frequency changers)

APPROVED FOR RELEASE: 08/23/2000 CIA-RDP86-00513R000929510010-4"

"APPROVED FOR RELEASE: 08/23/2000 CIA-RDP86-00513R000929510010-4

LEVENSTERN, I.I.

USSR/Electronics - Frequency Convertor

Card 1/1 Pub. 24-4/2

Author : Levenstern, I. I., and Kostandi, G. S., Astrakhan, (VNORIE)

Title : Metric-wave triode frequency convertor

Periodical : Radiotekhnika, 10, 29-35, Jun 55

Abstract : Optimum variants for metric-wave triode frequency convertor circuits which satisfy the rigid requirements of a modern radio receiver are discussed. The triode frequency convertor, built in the form of a double bridge, has the advantages of high transfer ratio, low voltage leak, and low noise factor. The two best frequency convertor circuits for operation in the ultrahigh-frequency range (60-80 megacycles), are those with the induction bridges and those with the capacitance bridge coupled to the grid circuit. Double triodes with separate cathode leads were used in this experiment. The calculated values for the transfer ratio of the two frequency convertor circuits were compared with the experimental values and were found to be in good agreement. Graphs.

Institution : All-Union Scientific and Technical Society of Radio Engineering and Electric Communications imeni A. Popov (VNORIE)

Submitted : June 16, 1954

APPROVED FOR RELEASE: 08/23/2000 CIA-RDP86-00513R000929510010-4"

"APPROVED FOR RELEASE: 08/23/2000 CIA-RDP86-00513R000929510010-4

CARD 1 / 2 PA - 1711

SUBJECT USSR / PHYSICS
AUTHOR LEVENSTERN, I.I.
TITLE Meter-Wave Frequency Transformers on Pentodes.
PERIODICAL Radiotechnika, 11, fasc. 11, 53-59 (1956)
Issued: 12 / 1956

A number of balance schemes of single-step heterodyne frequency transformers with pentodes is investigated. They are distinguished by the divisor scheme in the electric mains circuit as well as by the scheme of the heterodyne, which uses either the capacitive or the inductive back-coupling between the anode- and the mains-circuit of the tube. At first single-step heterodyne frequency transformers with capacitive divisor are investigated. The formulae for the amount of capacity corresponding to the optimum value of the transfer parameters, and for the maximum value of the coefficient of the amplification of the high-frequency cascade for the optimum value of the transfer parameter, and, finally, the dependence of the coefficient of the amplification of the high-frequency cascade on the transfer parameter are expressed in relative quantities. The latter relation is graphically represented.
Next, a second variety of the scheme of a single-step frequency transformer with capacitive divisor in which a heterodyne with inductive back-coupling is used, is mentioned.
There follows the investigation of single-step frequency transformers with an inductive divisor and a heterodyne with capacitive back-coupling. Like before, formulae are derived also for this case. As a second variety of this scheme a

APPROVED FOR RELEASE: 08/23/2000 CIA-RDP86-00513R000929510010-4"

"APPROVED FOR RELEASE: 08/23/2000 CIA-RDP86-00513R000929510010-4

LEVENSTERN, O. L., Engineer

"Fundamentals of Hydrostatics of the Follower Devices of Servodrives for Control of Transport Machinery." Sub 25 Jun 47, Sci Res Automobile and Automotive Inst (NAMI)

Dissertations presented for degrees in science and engineering in Moscow in 1947.

SO: Sum.No. 457, 18 Apr 55

APPROVED FOR RELEASE: 08/23/2000 CIA-RDP86-00513R000929510010-4"

"APPROVED FOR RELEASE: 08/23/2000 CIA-RDP86-00513R000929510010-4

LEVENSTERN O. L.

Levenstern O. L., "The Work of Consecutive Automobile-type Service Equipment under Established Conditions," Moscow, Mashgiz, 1953, 32 pages with sketches. (USSR Ministry of Machine Building, State Automobile and Automotive Research Institute, NAMI, Issue 66.)

APPROVED FOR RELEASE: 08/23/2000 CIA-RDP86-00513R000929510010-4"

"APPROVED FOR RELEASE: 08/23/2000 CIA-RDP86-00513R000929510010-4

LEVENSTERN, O.L., kandidat tekhnicheskikh nauk; KRESTOVNIKOV, G.A., inzhener; OSIPYAN, A.V., kandidat tekhnicheskikh nauk, redakter; KOZLOVSKIY, I.S., kandidat tekhnicheskikh nauk, redakter; ZIL'BERBERG, Ya.G., inzhener, redakter; BRILING, N.R., professor, dekter tekhnicheskikh nauk, redakter; KALISH, G.G., dekter tekhnicheskikh nauk, professor, redakter; RAMAYYA, K.S., dekter tekhnicheskikh nauk, redakter; LIPGART, A.A., professor, redakter; PRYADILOV, V.I., kandidat tekhnicheskikh nauk, redakter; ROZANOV, V.G., kandidat tekhnicheskikh nauk, redakter; CHISTOZVONOV, S.B., inzhener, redakter; SHTEYNGART, M.D., redakter; UVAROVA, A.F., tekhnicheskiy redakter.

[Heating of brake linings in passenger cars] Nagrev tormoznykh nakladok legkovykh avtomobilei. Moskva, Ges.nauchno-tekh.izd-vo mashinostroit. lit-ry, 1955. 35 p. (Moscow. Gosudarstvennyi nauchno-issledovatel'skii avtomobil'nyi i avtomotornyi institut. Trudy, no.78). (MIRA 9:7)

1.Direktor Nauchno-issledovatel'skogo avtomotornogo instituta (for Osipyan).2.Zamestitel' direktora Nauchno-issledovatel'skogo avtomotornogo instituta (for Kozlovskiy).3.Chlen-korrespondent AN SSSR (for Briling).
(Automobiles--Brakes)

APPROVED FOR RELEASE: 08/23/2000 CIA-RDP86-00513R000929510010-4"

"APPROVED FOR RELEASE: 08/23/2000 CIA-RDP86-00513R000929510010-4

SOV/113-58-2-13/15

AUTHOR: Levenstern, O.L., Candidate of Technical Sciences

TITLE: Gluing on Brake Facings (Prikleivaniye tormoznykh nakladok)

PERIODICAL: Avtomobil'naya promyshlennost', 1958, Nr 2, pp 42-44 (USSR)

ABSTRACT: Brake facings are now fitted in the same way as the facings of clutch discs. These brake facings last longer and have an operating surface which is 7-15% larger. They resist a shear stress of 5.5 tons on a hydraulic press. The glue used must resist the temperature variations during operation of the brakes. For this purpose the glue type reduks-64 is employed; this is also used in the aviation industry. The brake shoes are perfectly cleaned before gluing by sand blasting, an abrasive belt, or by acid. The glue is thinly applied and after drying the surfaces are pressed together by special devices and heated in furnaces. Some foreign methods are also described in the article. There are 2 diagrams and 5 photos.

1. Brakes--Equipment 2. Glues--Applications 3. Glued joints --Test results

Card 1/1

APPROVED FOR RELEASE: 08/23/2000 CIA-RDP86-00513R000929510010-4"

"APPROVED FOR RELEASE: 08/23/2000 CIA-RDP86-00513R000929510010-4

PHASE I BOOK EXPLOITATION SOV/3604

Akademiya nauk SSSR. Institut mashinovedeniya

Povyshenie effektivnosti tormoznykh ustroystv. Svoystva friktsionnykh materialov (Increasing the Efficiency of Braking Devices. Properties of Friction Materials) Moscow, Izd-vo AN SSSR, 1959. 183 p. Errata slip inserted. 1,800 copies printed.

Resp. Ed.: V.S. Shabedrov, Doctor of Technical Sciences, Professor; Ed. of Publishing House: P.K. Belyanin; Tech. Ed.: T.V. Polyakova.

PURPOSE: This collection of articles is intended for engineers and scientific workers specializing in brakes and friction materials.

COVERAGE: The first group of articles deals with basic design measures for increasing the life and efficiency of brakes, the second group with problems related to the development and fields of application of new friction materials, the third group with testing methods and the results of investigations of friction pairs and brakes, and the fourth group with the design of brakes and calculation data. No personalities are mentioned. References accompany most of the articles.

PART III. METHODS OF TESTING AND INVESTIGATING FRICTION PAIRS AND BRAKES

Levenstern, O.L. Methods of Inspection Testing of Brake Linings for Automobiles 121

This article deals with the development of a method and equipment for testing automobile brake linings under conditions close to those during actual operation.

Shabalin, V.K. Testing Asbestos Friction Materials by the Modeling Method 130

The author describes the working principle of a newly developed testing stand for determining the coefficient of friction, wear, braking action, and the temperature regime of various types of asbestos friction material.

Chichinadze, A.V. Laboratory Full-Scale Tests of the New FK-16I "Metlinks" Friction Material on a Heavily Loaded Brake 145

The author gives experimental data on the above material developed at VNIIATI OKBM and IMASH of the Academy of Sciences of the USSR on full-scale drum and disk-type brakes.

PART IV. DESIGNING BRAKES 159

Aleksandrov, N.P. Modeling in Designing and Calculating Braking Devices 159

The author describes the application of modeling to designing brakes for freight-hoisting equipment, and the analytical work involved in it.

Maroshkin, V.N., and A.V. Chichinadze. Calculating Resistance Forces in Disk Brakes 170

The authors present a method of exact calculation of the elements of resistance, the friction force and torque of a segment-type brake shoe. The method can be also applied to any other shape of the brake shoe.

Shabedrov, V.S., and A.V. Chichinadze. On the "Mutual Overlapping" Coefficient (Ratio of friction surfaces of two bodies in sliding contact) 180

The authors discuss dependence of the coefficient of friction and the rate of wear on the temperature gradient in the layer close to the friction surface. They also discuss the dependence of the three above-mentioned parameters and of the friction surface temperature on the coefficient of mutual overlapping.

AVAILABLE: Library of Congress

VK/rem/jb
8-24-60

Card 7/7

Levenstern O.L.

APPROVED FOR RELEASE: 08/23/2000 CIA-RDP86-00513R000929510010-4"

"APPROVED FOR RELEASE: 08/23/2000 CIA-RDP86-00513R000929510010-4

SOV/113-59-7-6/19

12(2)

AUTHOR: Levenstern, O. L.

TITLE: Test Stand Experiments With Brake Linings

PERIODICAL: Avtomobil'naya promyshlennost', 1959, Nr 7, pp 15 - 19 (USSR)

ABSTRACT: The author discusses the development of brake linings and test stands for the experimental investigation of brake lining parameters. Experimental investigations are required, since there are no sufficiently complete and accurate methods available for establishing the brake lining parameters by engineering calculations. Determining the properties of brake linings on test stands alone is inadequate and additional road tests are required. The gripping of the wheels must be considered when developing brake linings. In the USSR, there ar no standards for brake lining parameters. Brake linings are tested according to GOST 6914-54 (for automobiles) and according to TU regulations (for trucks).

Card 1/2

APPROVED FOR RELEASE: 08/23/2000 CIA-RDP86-00

Test Stand Experiments With Brake Linings

SOV/113-59-7-6/19

The author explains in Table 1 the test procedures for brake linings adopted by the Society of Automotive Engineers in the USA. Finally, he describes the inertia test stand "STN" developed at NAMI. This stand, shown in Figure 4, is used for testing auto brake linings. It was approved by the Komitet standartov mer i izmeritel'nykh priborov pri Sovete Ministrov SSSR (Committee of Standards, Measures and Measuring Instruments at the USSR Council of Ministers). The test conditions are close to actual operating conditions and may be changed depending upon the type of vehicle for which the brake linings are to be tested. There are 1 photograph, 4 graphs, 2 tables and 2 Soviet references.

ASSOCIATION: NAMI

Card 2/2

"APPROVED FOR RELEASE: 08/23/2000 CIA-RDP86-00513R000929510010-4

LEVENT, D.Ye.

Furadonin therapy of inflammatory diseases of the kidneys and urinary tract. Urologiia 25 no. 5:45-51 S-O '60. (MIRA 14:1)
(URINARY ORGANS—DISEASES) (FURAN)

APPROVED FOR RELEASE: 08/23/2000 CIA-RDP86-00513R000929510010-4"

"APPROVED FOR RELEASE: 08/23/2000 CIA-RDP86-00513R000929510010-4

LEVENTAL, E.B

LEVENTAL, E.B.

Dinamika avtomaticheskogo regulirovaniia oborotov aviamotora posredstvom vinta izmeniaemogo shaga. Moskva, 1947. 72 p., tables, diagrs. (TSAGI. Trudy, no. 602

Title tr.: Dynamics of automatic regulation of engine revolutions by means of a variable pitch propeller.

QA911.M65 no.602

SO: Aeronautical Sciences and Aviation in the Soviet Union, Library of Congress, 1955

APPROVED FOR RELEASE: 08/23/2000 CIA-RDP86-00513R000929510010-4"

"APPROVED FOR RELEASE: 08/23/2000 CIA-RDP86-00513R000929510010-4

LEVENTAL', G.B.

Determining the efficiency of central heating and electric power plants equipped with counterpressure turbines. Trudy LIEI no.5: 143-162 '50. (MLRA 9:8)
(Heating from central stations)(Electric power plants)

APPROVED FOR RELEASE: 08/23/2000 CIA-RDP86-00513R000929510010-4"

"APPROVED FOR RELEASE: 08/23/2000 CIA-RDP86-00513R000929510010-4

MELENT'YEV, L. A.; AGRACHEV, I. I.; LEVENTAL', G. B.; MICHURIN, K. I.

Heating from Central Stations

Efficient schemes of heating systems for large cities and industrial centers. Izv. AN SSSR Otd. tekh. nauk, no. 4, 1952.

Monthly List of Russian Accessions, Library of Congress, November 1952. UNCLASSIFIED.

APPROVED FOR RELEASE: 08/23/2000 CIA-RDP86-00513R000929510010-4"

"APPROVED FOR RELEASE: 08/23/2000 CIA-RDP86-00513R000929510010-4

BOLOTOV, V.V., doktor tekhnicheskikh nauk; MELENT'YEV, L.A., doktor ekonomicheskikh nauk; BRIL, R.F., kandidat tekhnicheskikh nauk; LEVENTAL', G.B., kandidat tekhnicheskikh nauk; MICHURINA, K.I., kandidat tekhnicheskikh nauk [reviewers]; DUNAYEVSKIY, N.I. [author].

"Technical and economic principles of heating systems." N.I. Dunaevskii. Reviewed by V.V.Bolotov, L.A.Melent'ev, R.F.Bril', G.B.Levental', K.I.Michurina. Elek. sta. 24 no.12:56-57 D '53. (MLRA 6:12)

(Dunaevskii, N.I.) (Heating from central stations)

APPROVED FOR RELEASE: 08/23/2000 CIA-RDP86-00513R000929510010-4"

"APPROVED FOR RELEASE: 08/23/2000 CIA-RDP86-00513R000929510010-4

LEVENTAL', G.B., kandidat tekhnicheskikh nauk, dotsent.

Power advantages of the steam--gas cycle for electric power plants. Trudy LIMI no.7:97-122 '54. (MLRA 9:9)
(Electric power plants)

APPROVED FOR RELEASE: 08/23/2000 CIA-RDP86-00513R000929510010-4"

"APPROVED FOR RELEASE: 08/23/2000 CIA-RDP86-00513R000929510010-4

LEVENTAL, G.B.

6637. USE OF STEAM-GAS CYCLES IN COMBINED DISTRICT HEATING AND POWER STATIONS. Gelvan [illegible] Moscow, [illegible] considerable economies can be [illegible] stations if the exhaust from the gas turbine is [illegible] of water. (L).

APPROVED FOR RELEASE: 08/23/2000 CIA-RDP86-00513R000929510010-4"

"APPROVED FOR RELEASE: 08/23/2000 CIA-RDP86-00513R000929510010-4

LEVENTAL', G.B. (Leningrad); MELENT'YEV, L.A. (Leningrad)

Correlation between the thermodynamic and power indexes of heat-power plant efficiency. Izv.AN SSSR.Otd.tekh.nauk no.5: 40-49 My '56. (MLRA 9:8)

(Power plants) (Thermodynamics)

APPROVED FOR RELEASE: 08/23/2000 CIA-RDP86-00513R000929510010-4"

"APPROVED FOR RELEASE: 08/23/2000 CIA-RDP86-00513R000929510010-4

VOL'KHINA, V.N., inzhener; [redacted] kandidat tekhnicheskikh nauk; MELENT'YEV, L.A., professor.

Use of small and medium back-pressure turbines in industrial heating and power plants. Prom.energ. 11 no.5:1-8 My '56. (MLRA 9:9)
(Steam turbines)

APPROVED FOR RELEASE: 08/23/2000 CIA-RDP86-00513R000929510010-4"

"APPROVED FOR RELEASE: 08/23/2000 CIA-RDP86-00513R000929510010-4

LAVRENTAL', G. P., dotsent, kandidat tekhnicheskikh nauk.

Method of evaluating the efficiency of heat utilization in heat and power plants (TETS). Trudy LIEI no.12:23-47 1956. (MLRA 10:6)
(Heating from central stations)
(Electric power plants)

APPROVED FOR RELEASE: 08/23/2000 CIA-RDP86-00513R000929510010-4"

"APPROVED FOR RELEASE: 08/23/2000 CIA-RDP86-00513R000929510010-4

LEVENTHAL, G.B., kandidat tekhnicheskikh nauk, dotsent.

Technical and economic indices for prospective steam power plants. Trudy LIEI no.16:5-13 '57. (MLRA 10:8)
(Steam power plants)

APPROVED FOR RELEASE: 08/23/2000 CIA-RDP86-00513R000929510010-4"

"APPROVED FOR RELEASE: 08/23/2000 CIA-RDP86-00513R000929510010-4

PHASE I BOOK EXPLOITATION SOV/3407

Akademiya nauk SSSR. Energeticheskiy institut im. G.M. Krzhizhanovskogo

Problemy energetiki; sbornik posvyashchennyy akademiku G.M. Krzhizhanovskomu (Problems of Power Engineering; Collection of Articles Dedicated to Academician G.M. Krzhizhanovskiy) Moscow, 1959. 851 p. Errata slip inserted. 2,500 copies printed.

Eds. of Publishing House: R.B. Astrakhan, F.V. Dubrov, P.I. Dubrov, and N.N. Mayrova; Tech. Ed.: T.A. Prusakova; Editorial Board: A.V. Vinter, Academician (Deceased), V.I. Popkov (Resp. Ed.) Corresponding Member, Academy of Sciences USSR, V.I. Veyts, A.S. Predvoditelev, M.A. Styrikovich, K.F. Chukhanov, N.N. Begunova, Candidate of Technical Sciences, B.K. Emelev, Candidate of Technical Sciences, M.M. Lebedev, Candidate of Technical Sciences, and L.E. Sundukov.

PURPOSE: This collection of articles is intended as a tribute to the memory of Academician G.M. Krzhizhanovskiy.

COVERAGE: The collection contains sixty articles by former students and associates of the deceased Academician. The articles deal with problems of a wide range of subjects in the field of power engineering: problems of the regional development of electrical and thermal power engineering, power engineering technology and the physics of combustion. No personalities are mentioned. References are given after most articles.

Chukin, Sh.Ch. Power Engineering and the Sciences of Power Engineering in Kazakhstan 22

Alizade, A.R., B.A. Gul'mamedov, and V.I. Sal'nikovskiy. Development of Hydropower Engineering in Azerbaydzhan SSR 28

Khaneliya, P.G. Most Important Problems of Building Power Systems in the Georgian SSR in Connection With the Unification of Power Systems of the Caucasus 31

Fleyshe, K.K. Problems of Power Engineering in the Studies of the Academy of Sciences of the Estonian SSR 36

Veyts, I.E. Studies of the Power Engineering Institute of the Estonian Academy of Sciences in the Field of Unusual Power Engineering 42

Klepen, S.E. Postwar Power Engineering Research Expeditions by the Power Engineering Institute Imeni G.M. Krzhizhanovskiy, Academy of Sciences USSR 49

Tikhomirov, I.Ya. Power Engineering and Distribution of Manufacturing Enterprises 57

Bokrosov, A.N. Some Problems on the Efforts of Power Engineering on Industrial Specialization in Assimilated Regions of Eastern Siberia 65

Baltiyev, A.G. Prospects of Utilizing the Lena River and its Tributaries for Power Engineering Developments 74

Lagovy, V.S. Basic Considerations of Electric Power Supply Systems for Rural Regions of Kirgiz SSR 77

Gurevich, B.A. Utilizing the Capacity of Power Systems and Conditions of Operation Under Load 89

Belosov, I.S. Problems of Method in Prospective Planning of Distribution of an Emergency Reserve Among Electric Power Stations of the System 100

Lebedev, M.M. Principles in Laying Out Electric Distribution Networks 108

Krzhizhanovskiy, N.N. Some Problems in the Transmission of Electrical Energy Over Extremely Long Distances 119

Kuvalov, V.A. Some Scientific and Technical Problems in Improving Energy Characteristics of Hydropower Station Equipment 130

Elkin, B.V. Developing Guaranteed Graphs of Reservoir Utilization for Several Hydropower Stations Operating in a Cascade Connected With the Water Runoff 139

Nemetyrskaya, A.A. Calculated Equations and Indices for a Comparative Evaluation of the Power of Various Types of Extraction Noncondensing Type Turbines 145

Levental', G.B. Basic Principles of Joint (Parallel) Operation of District Heat-and-Power Stations in the Production of Thermal Energy 156

Levental', G.B.

APPROVED FOR RELEASE: 08/23/2000 CIA-RDP86-00513R000929510010-4"

"APPROVED FOR RELEASE: 08/23/2000 CIA-RDP86-00513R000929510010-4

SOV/96-59-4-2/21

AUTHOR: Levental', G.B., Candidate of Technical Sciences

TITLE: The Relative Effectiveness of Rational Heat and Power Supply Turbines with Pass-outs for District Heating (Otnositel'naya effektivnost' ratsional'nykh teplofikatsionnykh turbin s otopitel'nymi otborami)

PERIODICAL: Teploenergetika, 1959, Nr 4, pp 11-17 (USSR)

ABSTRACT: This is a theoretical article which describes the procedure and results of calculations to determine the main heat and power characteristics of rational types of heat supply turbines for a district heating load and to examine the technical and economic effectiveness of heat and electric power stations equipped with such turbines. The comparative thermal efficiency of pass out and condensing turbines is first determined by comparing the heat consumptions required to meet various loads by variants of combined and separate centralised power and heat generation. The economy of heat that results from the use of combined generation of heat and power is given in equations 3 and 4. The conditions in which the use of these equations is valid are discussed. In

Card 1/5

APPROVED FOR RELEASE: 08/23/2000 CIA-RDP86-00513R000929510010-4"

"APPROVED FOR RELEASE: 08/23/2000 CIA-RDP86-00513R000929510010-4

SOV/96-59-4-2/21

The Relative Effectiveness of Rational Heat and Power Supply Turbines with Pass-outs for District Heating

particular accurate conclusions about the thermal effectiveness of district heating and heat supply turbines can only be drawn on the basis of calculations of the power characteristics of the turbines, i.e. making allowance for the no-load fuel consumption and various conditions of partial heat loading. By this method a clear distinction can be made between the thermal efficiency of the turbines and the way in which they are used to meet the heating load curves. Equation 3 may be converted to the form of equation 5 which is convenient for analysis because it is possible to express the relative heat economy as a function of the main parameters of pass-out and condensing turbines and of the equivalent purely condensing turbines. It is also possible to allow for the conditions of use of the combined pass out and condensing turbines to meet the power and heat load curves, it is possible to consider separately the economy of heat that results from generating electric power in combination with heat supply and the over consumption of heat that results from producing electric power in the

Card 2/5

APPROVED FOR RELEASE: 08/23/2000 CIA-RDP86-00513R000929510010-4"

"APPROVED FOR RELEASE: 08/23/2000 CIA-RDP86-00513R000929510010-4

SOV/96-59-4-2/21

The Relative Effectiveness of Rational Heat and Power Supply Turbines with Pass-outs for District Heating

less efficient condensing cycle of the combined pass-out and condensing turbines as compared with the equivalent condensing turbine in a purely condensing station. Table 1 gives the relative thermal efficiency of turbines type VT-25-4 with different types of equivalent condensing turbines. Table 2 gives data about the relative thermal efficiency of different types of turbines with district heating pass outs. Two groups of turbines are considered in this table: the first includes normal pass out turbines type VT and VPT; the second group consists of new turbines with stepwise heating of the system water, type PVT. Comparison of the tabulated data for the two types of turbine shows how much it is possible to increase the relative thermal efficiency of turbines with district heating pass outs by increasing the initial steam conditions and using stepwise heating of the system water. The design of stepwise heating methods for the system water is discussed in relation to the method of controlling the heat output of the heat and electric power stations.

Card 3/5

APPROVED FOR RELEASE: 08/23/2000 CIA-RDP86-00513R000929510010-4"

"APPROVED FOR RELEASE: 08/23/2000 CIA-RDP86-00513R000929510010-4

SOV/96-59-4-2/21

The Relative Effectiveness of Rational Heat and Power Supply Turbines with Pass-outs for District Heating

Graphs showing the best ratios of heat to power generation when stepwise heating is used are given in Fig.2. The special features of stepwise heating of the system water are illustrated by giving the characteristics of a turbine type PVT-50 with a particular method of controlling the heat output. The utilisation curve of the district heating pass out of the turbine PVT-50 and the thermal load curve of the power station are given in Fig.3. The pressure in the regulated pass-out is assumed to vary from 0.5 to 0.9 atm. Graphs of variation in the steam pressure in the district heating pass-out as functions of the relative thermal loading of the station are given in Fig.4. The effect of pressure variation in the pass-outs on the amount of power generated in connection with heat supply is plotted in Fig.5. The curves reveal the close relationship between the operating conditions of the pass outs with stepwise heating of the system water and the load characteristics of different sections of the turbines. Technical and economic calculations show that extensive use should be made of 50 and 100 MW turbines

Card 4/5

APPROVED FOR RELEASE: 08/23/2000 CIA-RDP86-00513R000929510010-4"

"APPROVED FOR RELEASE: 08/23/2000 CIA-RDP86-00513R000929510010-4

SOV/96-59-4-2/21

The Relative Effectiveness of Rational Heat and Power Supply Surbines with Pass-outs for District Heating

with stepwise heating of the system water. Such turbines are particularly advantageous at heating loads of more than 300-400 Mkcal/hour and fuel costs of 25-50 rouble/ton of conventional fuel. With thermal loadings of 500-600 Mkcal/hour the use of turbines type PVT-100 in heat and electric power stations is justified however cheap the fuel. Moreover, such power stations, providing that the operating conditions are rational, can give a fuel economy of up-to 25% as compared with the separate generation of electric power and heat. There are 6 figures, 2 tables and 4 Soviet references.

ASSOCIATION: Leningradskiy inzhenerno-ekonomicheskiy institut (Leningrad Engineering-Economic Institute)

Card 5/5

APPROVED FOR RELEASE: 08/23/2000 CIA-RDP86-00513R000929510010-4"

"APPROVED FOR RELEASE: 08/23/2000 CIA-RDP86-00513R000929510010-4

ARTYUGIN, I.M.; GRACHEV, Yu.P.; DAVYDOV, L.N.; DOYNIKOV, Ya.P.; KIRPICHEV, V.I.; LEVENTAL', G.B.; MELENT'YEV, L.A.; MICHURIN, K.I.; NIKONOV, A.P.; SASHONKO, G.I.; STARIKOV, V.G.; FROLOV, V.I.; KHRILEV, L.S.; RABINOVICH, A.L., red.; SOBOLEVA, Ye.M., tekhn. red.

[Technical and economic principles of the expansion of heat supply engineering in power systems] Tekhniko-ekonomicheskie osnovy razvitiia teplofikatsii v energosistemakh. Moskva, Gos. energ. izd-vo, 1961. 318 p. (MIRA 15:3)
(Heat engineering) (Electric power plants)

APPROVED FOR RELEASE: 08/23/2000 CIA-RDP86-00513R000929510010-4"

"APPROVED FOR RELEASE: 08/23/2000 CIA-RDP86-00513R000929510010-4

LEVENTAL', G.B., kand. tekhn. nauk; POPYRIN, L.S., kand. tekhn. nauk; MELENT'YEV, L.A.

Choice of the parameters of condensing electric power plants in accordance with district conditions. Teploenergetika 10 no.7:2-8 Jl '63. (MIRA 16:7)

1. Sibirskiy energeticheskiy institut Sibirskogo otdeleniya AN SSSR. 2. Chlen-korrespondent AN SSSR (for Melent'yev).
(Electric power plants)

APPROVED FOR RELEASE: 08/23/2000 CIA-RDP86-00513R000929510010-4"

"APPROVED FOR RELEASE: 08/23/2000 CIA-RDP86-00513R000929510010-4

KARPOV, V.G. (Irkutsk); LEVENTAL', G.B. (Irkutsk); SYROV, Yu.P. (Irkutsk)

Mathematical models of a power system for choosing its optimum structure and modes of operation. Izv. AN SSSR. Energ. i transp. no.4:417-433 Jl-Ag '63. (MIRA 16:11)

APPROVED FOR RELEASE: 08/23/2000 CIA-RDP86-00513R000929510010-4"

"APPROVED FOR RELEASE: 08/23/2000 CIA-RDP86-00513R000929510010-4

MELENT'YEV, L.A.; LEVENTAL', G.B.

"Thermal section of electric power plants (thermal systems)." S.IA. Belinskii, V.A. Vediaev. Reviewed by L.A. Melent'ev, G.B. Levental'. Elek. sta. 34 no.6:96 Je '63. (MIRA 16:11)

1. Chlen-korrespondent AN SSSR (for Melent'yev).
(Electric power plants)
(Belinskii, S.IA.)
(Vediaev, V.A.)

APPROVED FOR RELEASE: 08/23/2000 CIA-RDP86-00513R000929510010-4"

"APPROVED FOR RELEASE: 08/23/2000 CIA-RDP86-00513R000929510010-4

KUZNETSOV, Yu.A.; MAKAROV, A.A.; MELENT'YEV, L.A.; MERENKOV, A.P.; NEKRASOV, A.S.; TSVETKOV, N.I.; KUZNETSOV, Yu.A.; MAKAROVA, A.S.; KARPOV, V.G.; MANSUROV, Yu.V.; SYROV, Yu.P.; KHRILEV, L.S.; TSVETKOVA, L.A.; VOYTSEKHOVSKAYA, G.V.; YEFIMOV, N.T.; LEVENTAL', G.B.; KHANAYEV, V.A.; BELYAYEV, L.S.; GAMK, A.Z.; KARTELEV, B.G.; KRUMM, L.A.; LIOPO, T.N.; SVIRKUNOV, N.N.; DRUZHININ, I.P.; KONOVALENKO, Z.P.; KHAM'YANOVA, N.V.; SHVARTSBERG, A.I.; NIKONOV, A.P.; STARIKOV, L.A.; POPYRIN, L.S.; PSHENICHNOV, N.N.; TROSHINA, G.M.; CHEL'TSOV, M.B.; SVETLOV, K.S.; SUMAROKOV, S.V.; TAKAYSHVILI, M.K.; TOLMACHEVA, N.I.; KHASILEV, V.Ya.; KOSHELEV, A.A.; KUDINOVA, L.I., red.

[Methods for using electronic computers in the optimization of power engineering calculations] Metody primeneniia elektronno-vychislitel'nykh mashin pri optimizatsii energeticheskikh raschetov. Moskva, Nauka, 1964. 318 p. (MIRA 17:11)

1. Akademiya nauk SSSR. Sibirskoye otdeleniye. Energeticheskiy institut. 2. Chlen-korrespondent AN SSSR (for Melent'yev).

APPROVED FOR RELEASE: 08/23/2000 CIA-RDP86-00513R000929510010-4"

"APPROVED FOR RELEASE: 08/23/2000 CIA-RDP86-00513R000929510010-4

LEVENTAL', G.B., kand. tekhn. nauk

Centralized heating systems in Siberia and the Far East.
Teploenergetika 11 no.11:23-26 N '64. (MIRA 17:12)

1. Energeticheskiy institut Sibirskogo otdeleniya AN SSSR.

APPROVED FOR RELEASE: 08/23/2000 CIA-RDP86-00513R000929510010-4"

"APPROVED FOR RELEASE: 08/23/2000 CIA-RDP86-00513R000929510010-4

L 41493-65

ACCESSION NR: AP5004058 S/0096/65/000/002/0024/0029

AUTHORS: Levental', G. B. (Candidate of technical sciences); Khrilev, L. S. (Candidate of technical sciences); Ivanov, [illegible] A. (Engineer)

TITLE: A sample computer calculation of the external air temperatures for gas turbine installations

SOURCE: Teploenergetika, no. 2, 1965, 24-29

TOPIC TAGS: gas turbine installation, computer, probability, binomial distribution/ BESM 2 computer

ABSTRACT: A method for determining the relation between the rated available power of a gas turbine and the change in the external air temperature is described. On the basis of probabilistic analyses of the fluctuations in the external temperature corresponding to the different [illegible] and the choice of the [illegible] A binomial distribution was used for the fluctuations. For the numerical calculations, a BESM-2 computer was used. The mean air temperatures used in these calculations [illegible] year averages of the local [illegible] air [illegible] original,

APPROVED FOR RELEASE: 08/23/2000 CIA-RDP86-00513R000929510010-4"

"APPROVED FOR RELEASE: 08/23/2000 CIA-RDP86-00513R000929510010-4

L 41493-65

ACCESSION NR: AP5004058

Moscow, and Sverdlovsk. The electrical energy was expressed in the form,

$$E_{gt} = N_{nom} h_{gt}$$

where h is the time of operation (less than 2000 hours), and N_{nom} is the nominal power. The optimum value of the temperature was taken as the temperature corresponding to the minimum calculated cost given by

$$Z_i = \frac{S_i + \sigma_n K_i}{N_{nom}},$$

where σ_n is the standard efficiency of the turbine, K_i the capital cost, and S_i the annual operation cost. It was found that, depending upon the number of hours of operation, the nominal power can be increased by [illegible] by proper [illegible] optimum design values recommended for the cities of Kiev, Moscow, and Sverdlovsk are respectively: +50, -50, and [illegible] for h_{gt} = [illegible] hrs, and [illegible] 0→50 for h_{gt} = 2000 hrs. Orig. art. has: 19 formulas, 5 figures, and [illegible] tables.

ASSOCIATION: Sibirskiy energeticheskiy institut SO AN SSSR (Siberian Power Institute SO AN SSSR)

Card 2/3

APPROVED FOR RELEASE: 08/23/2000 CIA-RDP86-00513R000929510010-4"

"APPROVED FOR RELEASE: 08/23/2000 CIA-RDP86-00513R000929510010-4

L 41473-65

ACCESSION NR: AP5004058

SUBMITTED: 00 ENCL: 00 SUB CODE: PA

NO REF SOV: 005 OTHER: 001

Card 3/3

APPROVED FOR RELEASE: 08/23/2000 CIA-RDP86-00513R000929510010-4"

"APPROVED FOR RELEASE: 08/23/2000 CIA-RDP86-00513R000929510010-4

[redacted], kand. tekhn. nauk; KHKLIEV, L.S., kand. tekhn. nauk; IVANOV, O.A., inzh.

Choice of the ambient air temperature rating of gas turbine systems using computers. Teploenergetika 12 no.2:24-29 F '65.
(MIRA 18:3)

1. Sibirskiy energeticheskiy institut Sibirskogo otdeleniya AN SSSR.

APPROVED FOR RELEASE: 08/23/2000 CIA-RDP86-00513R000929510010-4"

"APPROVED FOR RELEASE: 08/23/2000 CIA-RDP86-00513R000929510010-4

EL'PERIN, I. T.; GALENSHTEYN, D. M.; LEVENTAL', L. I.

"The influence of unsteadiness and of surface effects on the flow regime and heat transfer."

report submitted for 2nd All-Union Conf on Heat & Mass Transfer, Minsk, 4-12 May 1964.

Inst of Heat & Mass Transfer, AS BSSR.

APPROVED FOR RELEASE: 08/23/2000 CIA-RDP86-00513R000929510010-4"

"APPROVED FOR RELEASE: 08/23/2000 CIA-RDP86-00513R000929510010-4

ACCESSION NR: AP4044412 S/0170/64/000/008/0016/0019

AUTHORS: El'perin, I. T.; Galershteyn, D. M.; Levental', L. I.

TITLE: The influence of surface effects and mobility on processes of transfer in heterogenic systems

SOURCE: Inzhenerno-fizicheskiy zhurnal, 7, no. 8, 1964, 16-19

TOPIC TAGS: flow channel, pipe flow, Reynolds number, heat exchange, mass exchange, flow velocity pulsation, hydrophobization/ GKZh 94 hydrophobization liquid, PPTN1 potentiometer, GZP 47 galvanometer

ABSTRACT: The influence of velocity pulsation and wall moistening on the Reynolds number was studied. A special test apparatus was designed and is shown in Fig. 1 on the Enclosures. In the first series of tests to determine the influence of velocity pulsation upon Reynolds number observations were made of the distribution of water temperature along the test pipes and of the pulsation frequency. Laminar-to-turbulent flow transition was made visually, thus determining a minimal Reynolds number range. Resulting values of Reynolds number versus pulsation frequency in cycles per second are shown in Table 1 on the Enclosures. The second series of tests determined the influence of wall absorption on the critical Reynolds number. GKZh-94 hydrophobization silica suspension liquid was used in the tests, and

Card 1/4

APPROVED FOR RELEASE: 08/23/2000 CIA-RDP86-00513R000929510010-4"

"APPROVED FOR RELEASE: 08/23/2000 CIA-RDP86-00513R000929510010-4

ACCESSION NR: AP4044412

measurements were taken with a PPTN-1 potentiometer and a GZP-47 galvanometer. Results indicated that for a Reynolds number between 5000 and 10000 the heat exchange intensity and pipe hydrophobization were less than those for a pipe without hydrophobization treatment. The authors expressed the opinion that the superposition of velocity pulsations and wall hydrophobization decreases the value of the Reynolds number and changes the relationship Nu = f(Re). Orig. art. has: 2 figures, 3 equations, and 1 table.

ASSOCIATION: Institut teplo-i massoobmena AN BSSR (Institute of Heat and Mass Exchange, AN BSSR)

SUBMITTED: 25Mar64

ENCL: 02

SUB CODE: ME

NO REF SOV: 003

OTHER: 000

Card 2/4

APPROVED FOR RELEASE: 08/23/2000 CIA-RDP86-00513R000929510010-4"

"APPROVED FOR RELEASE: 08/23/2000 CIA-RDP86-00513R000929510010-4

ACCESSION NR: AP4044412

ENCLOSURE: 01

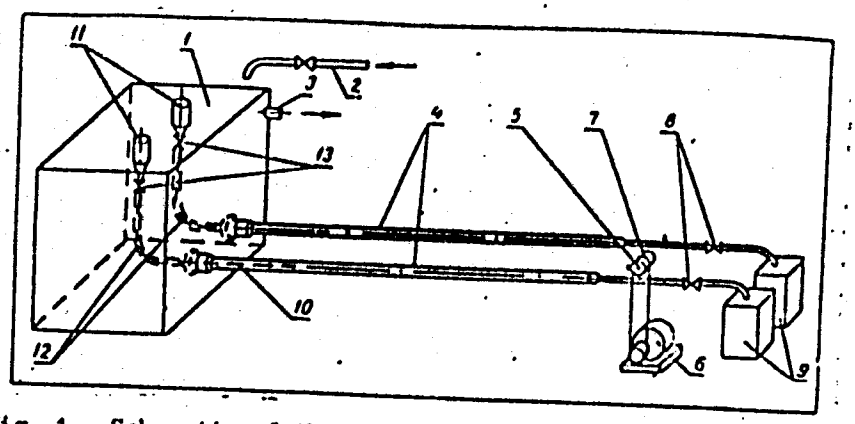

Fig. 1. Schematic of the experimental setup.
1- tank; 2- supply pipe; 3- modulation pipe; 4- working channels; 5- pump pulsator; 6- electric motor; 7- variator; 8- regulator valves; 9- measuring tanks; 10- pipes for coloring emission, 11- pigment containers; 12- resin joining pipes; 13- regulator valves.

Card 3/4

APPROVED FOR RELEASE: 08/23/2000 CIA-RDP86-00513R000929510010-4"

"APPROVED FOR RELEASE: 08/23/2000 CIA-RDP86-00513R000929510010-4

ENCLOSURE: 02

ACCESSION NR: AP4044412

n, cycles	0	4.65	5.74	10.72	17.24	19.[illegible]2
Re_k	2310	1750	1699	1597	1533	1511

Table 1. Dependence $Re_k = f(n)$.

Card 4/4

APPROVED FOR RELEASE: 08/23/2000 CIA-RDP86-00513R000929510010-4"

"APPROVED FOR RELEASE: 08/23/2000 CIA-RDP86-00513R000929510010-4

L 26393-66 EWP(m)/EPF(n)-2/EWP(j)/EWT(1)/EWT(m)/ETC(m)-6/T/EWA(d) SM/WW/DJ

ACC NR: AP6007191 SOURCE CODE: UR/0170/66/010/002/0235/0239

79
B

AUTHORS: El'perin, I. T.; Smol'skiy, B. M.; Levental', L. I.

ORG: Institute of Heat and Mass Transfer, Academy of Sciences BSSR, Minsk (Institut teplo- i massoobmena AN BSSR)

TITLE: On the problem of lowering the hydrodynamic resistance in conduits

SOURCE: Inzhenerno-fizicheskiy zhurnal, v. 10, no. 2, 1966, 235-239

TOPIC TAGS: fluid friction, friction loss, polymer rheology, Reynolds number, turbulent flow, laminar flow

ABSTRACT: The reduction of hydraulic friction in tubes or pipes by adding high-molecular weight polymers is analyzed. It is shown that these surface-active polymers are absorbed on the tube walls and oriented in such a manner in the laminar sublayer that they lower the skin friction, generate slip near the wall, and damp out turbulent fluctuations. Starting with the power law equation for shear in rheological admixtures

$$\tau = k\gamma^n$$

or,

$$\tau = D\Delta P/4L = K(8w_m/D)^n,$$

Card 1/2 UDC: 535.501.312+535.503.2+535.517.4

APPROVED FOR RELEASE: 08/23/2000 CIA-RDP86-00513R000929510010-4"

"APPROVED FOR RELEASE: 08/23/2000 CIA-RDP86-00513R000929510010-4

L 26393-66

ACC NR: AP6007191

0

the following expression is derived for the modified flow rate in a tube after the addition of the polymers,

$$q > a\left(\frac{K}{D^{1.5}\rho\nu^{0.25}}\right)^{\frac{1}{1.75-a'}},$$

$$a = 3.2^{\frac{4a'+1.25}{1.75-a'}} \cdot 0.3164^{-\frac{1}{1.75-a'}}.$$

A numerical example is given to illustrate the point. Orig. art. has: 10 formulas.

SUB CODE: 20/ SUBM DATE: 11Sep65/ ORIG REF: 012/ OTH REF: 006

Card 2/2 CC

APPROVED FOR RELEASE: 08/23/2000 CIA-RDP86-00513R000929510010-4"

"APPROVED FOR RELEASE: 08/23/2000 CIA-RDP86-00513R000929510010-4

LEVENTAL', L.Ya., inzhener.

The "Deltic" diesel locomotive engine. Tekh.zhel.dor.15 no.4: 32 Je '56. (MLRA 9:9)
(Great Britain--Diesel locomotives)

APPROVED FOR RELEASE: 08/23/2000 CIA-RDP86-00513R000929510010-4"

"APPROVED FOR RELEASE: 08/23/2000 CIA-RDP86-00513R000929510010-4

LEVENTAL', L.Ya., inzh.

Use of gas-turbine engines for high-speed passenger trains. Zhel. dor.transp. 45 no.9:67-70 S '63. (MIRA 16:9)
(Railroads—Trains) (Gas-Turbines)

APPROVED FOR RELEASE: 08/23/2000 CIA-RDP86-00513R000929510010-4"

"APPROVED FOR RELEASE: 08/23/2000 CIA-RDP86-00513R000929510010-4

LEVENTAL', L.Ya., inzh.; POLUEKTOV, V.K., inzh.

Investigating the reactance degree of the turbine stage with a low nominal reactance during speed changes. Trudy TSNII MPS no.214:29-37 '61. (MIRA 14:8)

(Gas-turbine locomotives)

APPROVED FOR RELEASE: 08/23/2000 CIA-RDP86-00513R000929510010-4"

"APPROVED FOR RELEASE: 08/23/2000 CIA-RDP86-00513R000929510010-4

41833

S/262/62/000/004/005/024
I014/I252

AUTHORS: Levental' L. YA. and Poluéktov, V. K.

TITLE: Investigation of the degree of reactivity of a turbine stage of low rated reactivity under speed variation.

PERIODICAL: Referativnyy zhurnal, Silovyye ustanovki, no. 4, 1962, 32, abstract 42.4.181. "Tr. Vses n.-i. in-ta zh-d. transp." 1961, no. 214, 29–36

TEXT. An investigation is reported of the character of variation of the degree of reactivity ρ of a turbine stage at different speeds. A stage with small rated ρ was investigated with a view to obtaining sufficiently high negative ρ values. With decrease of speed the inlet angle of the stream to the working blades decreases, with resulting reduction in the effective area of the rotor inlet. This can lead to transformation of the converging flow in the channels between the rotor blades into a diverging one. In the case of diverging flow the pressure in the axial clearance between nozzles and wheel is lower than that behind the wheel, i.e. ρ becomes negative. The experiments yielded $\rho = f(u/c_0)$ curves for two levels of pressure drop, of the same character as the relationships obtained for stages with higher initial ρ. An increase in the inlet angles leads to a decrease in ρ, down to considerable negative values. The curves reflect the general character of the qualitative variation of $\rho = f(u/c_0)$. The data on ρ for $u/c_0 = 0$ can be used in determining the coefficients of the maximum torque equation for an active turbine stage. There are 4 figures and 2 references.

[Abstracter's note: Complete translation.]

Card 1/1

APPROVED FOR RELEASE: 08/23/2000 CIA-RDP86-00513R000929510010-4"

"APPROVED FOR RELEASE: 08/23/2000 CIA-RDP86-00513R000929510010-4

LEVENTAL', L.Ya., inzh.

A main line gas turbine locomotive with a mechanical transmission system. Elek.i tepl.tiaga 7 no.2:46-48 F '63. (MIRA 16:2)

(Great Britain—Locomotives)

APPROVED FOR RELEASE: 08/23/2000 CIA-RDP86-00513R000929510010-4"

"APPROVED FOR RELEASE: 08/23/2000 CIA-RDP86-00513R000929510010-4

LEVENTAL', L.Ya., inzh.

Use of a locomotive gas-turbine engine for the heating of passenger trains. Trudy MIIT no. 179:106-116 '64. (MIRA 17:7)

APPROVED FOR RELEASE: 08/23/2000 CIA-RDP86-00513R000929510010-4"

"APPROVED FOR RELEASE: 08/23/2000 CIA-RDP86-00513R000929510010-4

LEVENTAL', N.I., inzh.; TSEYTLIN, D.G., inzh.

Design of low-voltage power networks with consideration of effective current density. Prom. energ. 17 no.9:28-30 S '62. (MIRA 15:8)

(Electric power distribution)

APPROVED FOR RELEASE: 08/23/2000 CIA-RDP86-00513R000929510010-4"

"APPROVED FOR RELEASE: 08/23/2000 CIA-RDP86-00513R000929510010-4

LEVENTAL', R., sotrudnik.

Work methods of innovator Neretin. Mast.ugl. 6 no.9:13 S '57. (MIRA 10:11)

1. Karagandinskaya normativno-issledovatel'skaya stantsiya. (Coal mines and mining) (Neretin, Ivan Danilovich)

APPROVED FOR RELEASE: 08/23/2000 CIA-RDP86-00513R000929510010-4"

"APPROVED FOR RELEASE: 08/23/2000 CIA-RDP86-00513R000929510010-4

[illegible] (N) [illegible]: 03/0013/66/000/015/0093/0094

[illegible]: [illegible], Yu. [illegible]; Kofman, L. M.

ORG: None

TITLE: A navigation instrument for recording the course and speed traversed. Class 42, No. 184469

SOURCE: Izobret prom obraz tov zn, no. 15, 1966, 93-94

TOPIC TAGS: navigation equipment, recording equipment

ABSTRACT: This Author Certificate presents a navigation instrument for recording the course and speed traversed. It is designed for use by airplanes and other moving platforms, and indicates the approximate vertical. The instrument is equipped with a gyroscope influenced by a body subjected to the action of gravity. The instrument is also equipped with appliances for easing the following gyroscope out of the vertical (see Fig. 1). To make the gyroscope independent of the influence of the body subjected to gravity, the gyroscope tracks the vertical direction. A momentum integrator-controller system in two mutually perpendicular planes is introduced into the instrument. This system is designed so that the change of direction of the gyroscope axis takes place proportionally to the rate of motion along a given plane.

UDC: 527:6:62.563:620.1.057.4

Card 1/2

APPROVED FOR RELEASE: 08/23/2000 CIA-RDP86-00513R000929510010-4"

"APPROVED FOR RELEASE: 08/23/2000 CIA-RDP86-00513R000929510010-4

L 10060-67

ACC NR: AP6029932

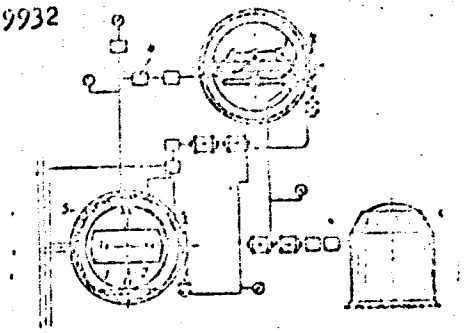

Fig. 1. 1 - gyroscope; 2 - gyroscope axis; 3 - accelerometer; 4 - integrator; 5 - momentum controller; 6 - gyrocompass

The coefficient of proportionality is selected by the appropriate calculation. The gyroscopic pendulum used in the instrument has a period of 84.4 minutes. Orig. art. has: 1 figure.

SUB CODE: 17/ SUBM DATE: 26Dec32

Card 2/2

APPROVED FOR RELEASE: 08/23/2000 CIA-RDP86-00513R000929510010-4"

"APPROVED FOR RELEASE: 08/23/2000 CIA-RDP86-00513R000929510010-4

LEVITAL, Zdenko

History of tuberculosis. Med. glasn. 11 no.3:111-114 Mar 57.
(TUBERCULOSIS,
hist. (Ser))

APPROVED FOR RELEASE: 08/23/2000 CIA-RDP86-00513R000929510010-4"

"APPROVED FOR RELEASE: 08/23/2000 CIA-RDP86-00513R000929510010-4

LEVENTAL, Zdenko, doc. dr.; STRASER, Toma, dr.

On certain specific forms of hyperthyroidism. Med. glasn. 14 no.2a:120-126 F '60.

1. Interna klinika B Medicinskog fakulteta u Beogradu, Upravnik: prof. dr. R. Berovic.
(HYPERTHYROIDISM)

APPROVED FOR RELEASE: 08/23/2000 CIA-RDP86-00513R000929510010-4"

"APPROVED FOR RELEASE: 08/23/2000 CIA-RDP86-00513R000929510010-4

LEVENTAL, Zdenko, doc. dr.; PUTNIK, Milan dr.; GLIGOROVA, Nada, dr.

Our experiences with ambulatory therapy of hyperthyroidism with favistan. Med. glasn. 14 no.2a:140-143 F '60.

1. Interna klinika B Medicinskog fakulteta u Beogradu, Upravnik: prof. dr R. Berovic.
(THYROID ANTAGONISTS ther.)
(HYPERTHYROIDISM ther.)

APPROVED FOR RELEASE: 08/23/2000 CIA-RDP86-00513R000929510010-4"

"APPROVED FOR RELEASE: 08/23/2000 CIA-RDP86-00513R000929510010-4

SOV/2-58-11-9/18

AUTHOR: Levente, M., Professor, Chief of the Administration

TITLE: Actual Tasks of Rumanian Statistics (Aktual'nyye zadachi Rumynskoy statistiki)

PERIODICAL: Vestnik statistiki, 1958, Nr 11, pp 55-60 (USSR)

ABSTRACT: This is a listing of the main statistical problems in the Rumanian People's Republic.

ASSOCIATION: TsSU Rumynskoy Narodnoy Respubliki (Central Statistical Administration of the Rumanian People's Republic)

Card 1/1

APPROVED FOR RELEASE: 08/23/2000 CIA-RDP86-00513R000929510010-4"

"APPROVED FOR RELEASE: 08/23/2000 CIA-RDP86-00513R000929510010-4

LEVENTE, Mihail

A methodological analysis of the social economic structure of agriculture. Probleme econ 14 no.10:125-142 '61.

1. Director general al Directiei Centrale de Statistica.

APPROVED FOR RELEASE: 08/23/2000 CIA-RDP86-00513R000929510010-4"

"APPROVED FOR RELEASE: 08/23/2000 CIA-RDP86-00513R000929510010-4

LEVENTER, H.

Rumania/Chemical Technology - Chemical Products and Their Application. Water Treatment. Sewage Water, I-11

Abst Journal: Referat Zhur - Khimiya, No 19, 1956, 62462

Author: Leventer, H.

Institution: None

Title: Removal of Boiler Scale

Original Periodical: Combaterea depunerilor de piatra din cazanele de abur., Rev. ind. aliment. prod. vegetale, 1955, No 10, 5-6; Rumanian

Abstract: A review article on scale formation in steam generating boilers and methods for prevention and removal of scale.

Card 1/1

APPROVED FOR RELEASE: 08/23/2000 CIA-RDP86-00513R000929510010-4"

"APPROVED FOR RELEASE: 08/23/2000 CIA-RDP86-00513R000929510010-4

MUSTATZIU, G.,; SCHREIBER, H.,; LEVENTER-BERTHEIL, R.,; PREDOVICIU, F.,; CHIRESCU, M. [redacted]

Tuberculostatic effect of isonicotinoylhydrazonopyruvic acid, isonicotinoylhydrazonooxalacetic acid, isonicotinoylhydrazono-3-mercaptopyruvic acid, isonicotinoylhydrazono-3-bromopyruvic acid, isonicotinoylhydrazono-2-oxoglutaric acid and isonicotinoylhydrazonolevulinic acid. Bul. stiint., sect. med. 7 no.2:564-566 Apr-June 55.

(HYDRAZINE, derivatives
isonicotinoylhydrazono derivatives of ketone acids, eff. on Mycobacterium species)
(MYCOBACTERIUM, eff. of drugs on
isonicotinoylhydrazono derivatives of ketone acids)
(KETONE ACIDS, eff.
isonicotinoylhydrazono derivatives, on Mycobacterium species)

APPROVED FOR RELEASE: 08/23/2000 CIA-RDP86-00513R000929510010-4"

"APPROVED FOR RELEASE: 08/23/2000 CIA-RDP86-00513R000929510010-4

32336
S/081/61/000/024/072/086
B151/B101

11.9400 also 1583

AUTHORS: Vaynshtok, V. V., Kartinin, B. N., Avchina, S. A., Levento, R. A.

TITLE: Combination of lithium and aluminum soaps in consistent greases

PERIODICAL: Referativnyy zhurnal. Khimiya, no. 24, 1961, 471, abstract 24M96 (Tr. Mosk. in-t neftekhim. i gaz. prom-sti, no. 32, 1960, 41 - 52)

TEXT: The optimum temperatures of isothermal crystallization of soft greases containing mono- and distearates of Al are 120 and 80°C, respectively. In these conditions the greases have their highest viscosity, limiting shear stress and drop-fall temperature, etc. For the same weight concentrations a greater thickening effect is exhibited by the distearate while for equal molecular concentrations by the monostearate of Al. The temperature dependence of the volume-mechanical properties of the greases thickened with Al distearate is much more pronounced than with greases thickened with Al monostearate. For studying

Card 1/2

APPROVED FOR RELEASE: 08/23/2000 CIA-RDP86-00513R000929510010-4"

"APPROVED FOR RELEASE: 08/23/2000 CIA-RDP86-00513R000929510010-4

32336
S/081/61/000/024/072/086
Combination of lithium and... B151/B101

the effect of additions of Al soap on the properties of Li greases, Al monostearate was chosen, giving the best characteristics of the greases. Besides this, the optimum temperatures of crystallization of Li stearate (110°C) and Al monostearate (120°C) are close to each other. The introduction of Al soaps into Li greases lowers their viscosity, limiting shear stress, colloidal stability, and drop-fall temperature. When the ratio of Al monostearate to Li soap was increased up to 3:1 or that of Al distearate to Li stearate up to 1:1, it was not possible to prepare the greases. The joint crystallization of Al and Li soaps, as shown by examination with an electron microscope, is considerably hindered, and in the case of low concentrations of Al soap (up to 50% of monostearate and 25% of Al distearate) there occurs a considerable reduction in the dispersion of the Li stearate crystallites.
[Abstracter's note: Complete translation.]

Card 2/2

APPROVED FOR RELEASE: 08/23/2000 CIA-RDP86-00513R000929510010-4"

"APPROVED FOR RELEASE: 08/23/2000 CIA-RDP86-00513R000929510010-4

LEVENTO, R.A.

Combined evaluation of lubricants for optical apparatus. Trudy MINKHiGP no.44:251-257 '63. (MIRA 18:5)

APPROVED FOR RELEASE: 08/23/2000 CIA-RDP86-00513R000929510010-4"

"APPROVED FOR RELEASE: 08/23/2000 CIA-RDP86-00513R000929510010-4

SULIMA-SAMUYLLO, A.P., prepodavatel'; KROT-KRIVAL', I.S., prepodavatel'; KOVROVTSEVA, Ye.G., prepodavatel'; KOVALEVA, I.N., prepodavatel'; BUGROVA, O.G., prepodavatel'; LEVENTO, T.Ya., prepodavatel'; PROKHOROV, V.F., red.; ZHAVORONKOV, I.I., red.; KHITROV, P.A., tekhn.red.

[German-Russian railroad dictionary] Nemetsko-russkii zheleznodorozhnyi slovar'. Sost.A.P.Sulima-Samuillo i dr. Pod red. V.F.Prokhorova. Moskva, Vses.izdatel'sko-poligr.ob"edinenie M-va putei sooobshcheniia, 1960. 536 p. (MIRA 14:4)

1. Kafedra inostrannykh yazykov Moskovskogo instituta inzhenerov zheleznodorozhnogo transporta (for Sulima-Samuyllo, Krot-Krival', Kovrovtseva, Kovaleva, Bugrova, Levento)
(Railroads--Dictionaries)
(German language--Dictionaries--Russian)

APPROVED FOR RELEASE: 08/23/2000 CIA-RDP86-00513R000929510010-4"

"APPROVED FOR RELEASE: 08/23/2000 CIA-RDP86-00513R000929510010-4

LEVENTOV, V.S.

A mineral of the series britholite-abakumalite in the aegerine-microcline metasomatites. Zap. Vses.min.ob-va 93 no. 2:189-194 '64. (MIRA 17:6)

APPROVED FOR RELEASE: 08/23/2000 CIA-RDP86-00513R000929510010-4"

"APPROVED FOR RELEASE: 08/23/2000 CIA-RDP86-00513R000929510010-4

VAYNSHTOK, V.V.; KARTININ, B.N.; AVCHINA, S.A.; LEVENTO, R.A.

Polyfunctional additives to lubricating oils based on natural and synthetic ether acids. Trudy MINKHiGP no.32: 53-67 '60. (MIRA 14:9)

(Lubrication and lubricants--Additives)

APPROVED FOR RELEASE: 08/23/2000 CIA-RDP86-00513R000929510010-4"

"APPROVED FOR RELEASE: 08/23/2000 CIA-RDP86-00513R000929510010-4

L 45714-66 EWT(m)/T DJ

ACC NR: AP6026501 (A) SOURCE CODE: UR/0318/66/000/005/0025/0029

AUTHOR: Vaynshtok, V. V.; Karakash, S. I.; Levento, R. A.; Kraskovskaya, M. I.

ORG: Moscow Institute of Petrochemical and Gas Industry im. I. M. Gubkin (Moskovskiy institut neftekhimicheskoy i gazovoy promyshlennosti)

TITLE: Synthetic fatty acids as raw material for lithium greases

SOURCE: Neftepererabotka i neftekhimiya, no. 5, 1966, 25-29

TOPIC TAGS: fatty acid, grease, soap

ABSTRACT: The paper reviews the results of studies of synthetic fatty acids (SFA) as raw materials for the preparation of lithium greases. It is shown that such greases prepared from SFA have properties equivalent to those of similar greases prepared from stearic acid. The best raw material for the production of lithium greases are saponified fractions of thermally modified SFA, particularly C_{10}-C_{16}. It is necessary to organize their production in order to meet the needs of the lithium grease industry. As raw material for the production of lithium greases, SFA (particularly those obtained without thermal modification) have a number of disadvantages, which result from a high content of unoxidized paraffin, unsaponified oxygen-containing products, and products insoluble in petroleum ether. The development of methods for improving the quality of SFA is necessary. Orig. art. has: 4 tables.

SUB CODE: 11/ SUBM DATE: none/ ORIG REF: 007

Card 1/1 UDC: 665.123.002.614:665.637.6.002.3

APPROVED FOR RELEASE: 08/23/2000 CIA-RDP86-00513R000929510010-4"

"APPROVED FOR RELEASE: 08/23/2000 CIA-RDP86-00513R000929510010-4

LEVENTSEV,

~~LEVENTS~~, N. P., Aspirant

"An Investigation of the Oxidation of Phosphorus in Molten Iron and the Influence of Phosphorus on the Solubility of Oxygen in Melts of Iron and Chromium, and Iron and Nickel." Cand Tech Sci, Inst of Metallurgy imeni A. A. Baykov, 7 Dec 54. (VM, 24 Nov 54)

Survey of Scientific and Technical Dissertations Defended at USSR Higher Educational Institutions (11)

SO: Sum. No. 521, 2 Jun 55

APPROVED FOR RELEASE: 08/23/2000 CIA-RDP86-00513R000929510010-4"

"APPROVED FOR RELEASE: 08/23/2000 CIA-RDP86-00513R000929510010-4

The Influence of Phosphorus on the [illegible] Iron Chromium and Iron Nickel [illegible]

phosphorus content in iron chromium melts increases oxygen solubility. Temperature has a [illegible] solubility [illegible] iron chromium phosphorus melts [illegible] of phosphorus takes place together with [illegible] chromium. Oxygen solubility [illegible] increasing phosphorus concentration [illegible] of nickel in iron containing [illegible] decreases the solubility [illegible] and nickel in iron nickel [illegible] formation of iron and nickel phosphides [illegible]

APPROVED FOR RELEASE: 08/23/2000 CIA-RDP86-00513R000929510010-4"

"APPROVED FOR RELEASE: 08/23/2000 CIA-RDP86-00513R000929510010-4

ACC NR: AP6031290 SOURCE CODE: UR/0314/66/000/009/0015/0017

AUTHOR: Leventsov, A. N. (Engineer)

ORG: none

TITLE: New multistage swirl atomizer design

SOURCE: Khimicheskoye i neftyanoye mashinostroyeniye, no. 9, 1966, 15-17

TOPIC TAGS: combustion, liquid fuel rocket, swirl atomizer, fuel atomizer, atomization, spray nozzle

ABSTRACT: The disadvantage of conventional swirl atomizers is the large width of the spray cone which increases with increasing flow rate. Therefore, a spray atomizer of a given design can operate effectively only over a given range of flow rates. To eliminate this disadvantage, several new multistage swirl atomizers have been designed. The four stage atomizer shown in Fig. 1 consists of a coaxial shaft, an annular feed channel, a liquid distributor consisting of a rotor with radial inlet vanes and a perforated distributor drum, deflection plates, and a rotating atomizer drum. The liquid from the rotor of the distributor impinges on the conical

 UDC: 66.069.83-11

APPROVED FOR RELEASE: 08/23/2000 CIA-RDP86-00513R000929510010-4"

"APPROVED FOR RELEASE: 08/23/2000 CIA-RDP86-00513R000929510010-4

ACC NR: AP6031290

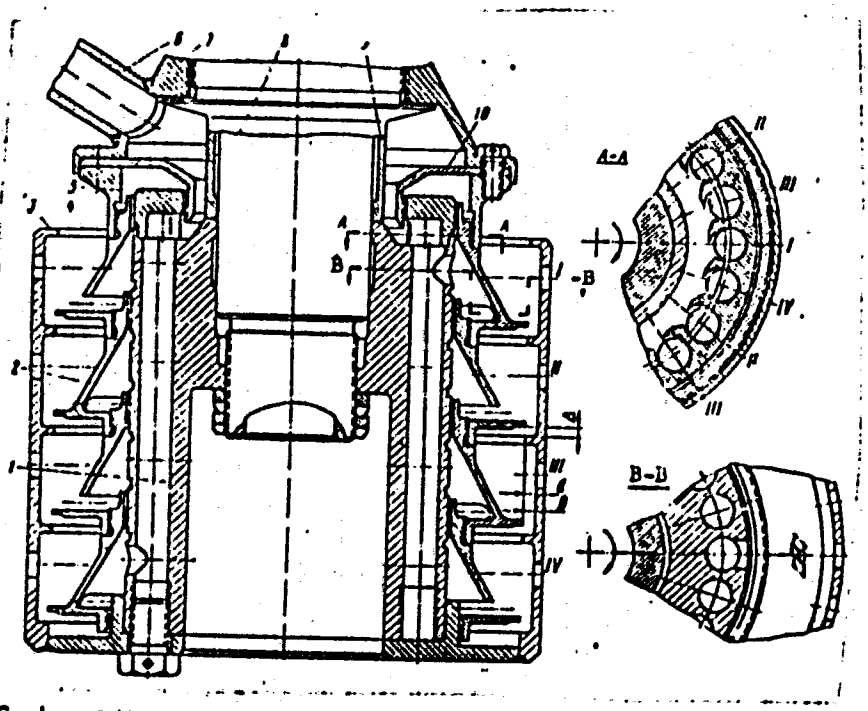

Fig. 1. Four-stage atomizer

1 - Distributor drum; 2 - deflector section; 3 - atomizer drum; 4 - flange; 5 - inlets; 6 - sleeve; 7 - fixed body; 8 - shaft; 9 - sealing insert; 10 - inlet ring. I-IV - stages and channels of the atomizer.

Card 2/2

APPROVED FOR RELEASE: 08/23/2000 CIA-RDP86-00513R000929510010-4"

"APPROVED FOR RELEASE: 08/23/2000 CIA-RDP86-00513R000929510010-4

ACC NR: AP6031290

deflection walls in each stage and passes to the wall of the rotating atomizer drum. The atomizer has a considerably higher flow rate than a single-stage atomizer with an identical spray cone diameter. Orig. art. has: 1 figure.

SUB CODE: 21/ SUBM DATE: none/ ORIG REF: 005/

Card 3/3

APPROVED FOR RELEASE: 08/23/2000 CIA-RDP86-00513R000929510010-4"

"APPROVED FOR RELEASE: 08/23/2000 CIA-RDP86-00513R000929510010-4

YEDIGAROV, S.G.; LEVENTSOV, A.N.; KRUGLOV, A.N.; RASHCHEPKIN, K.Ye.; ~~OVCHINNIKOV, I.S.~~

Mechanization of the packaging of solid petroleum bitumens. Neft. khoz. 40 no.4:60-65 Ap '62. (MIRA 15:5)
(Bitumen)
(Packaging machinery)

APPROVED FOR RELEASE: 08/23/2000 CIA-RDP86-00513R000929510010-4"

"APPROVED FOR RELEASE: 08/23/2000 CIA-RDP86-00513R000929510010-4

ATANASOV, An.; DZHINGOV, Al.; KITIPOV, Ant.; LEVENSON, Evg.; MILCHEV, M.; NIKOLOV, S.

Tests in fertilizing the eroded forest maroon soils.
Izv Inst "Nikola Pushkarov" no.5:101-124 '62.

APPROVED FOR RELEASE: 08/23/2000 CIA-RDP86-00513R000929510010-4"

"APPROVED FOR RELEASE: 08/23/2000 CIA-RDP86-00513R000929510010-4

BLINOV, O.S.; BELEN'KIY, Ye.L.; BRAUSEVICH, S.T.; DOROKHOV, B.A.; ZIGMUND, F.R.; ITSIKOV, G.B.; LEVER, A.A.; LESHCH-BORISOVSKIY, A.I.; MURTUZALIYEV, S.A.; PIIR, A.I.; YUZIKHIN, Ye.Ye.; YAKIMOV, I.D.; SHCHELKUNOV, V.V., retsenzent; GONCHAROV, A.F., otv. red.; KORCHUNOV, N.G., otv. red.; NIKOL'SKIY, B.V., otv. red.; POSTREMOV, G.A. [deceased]; SLUTSKER, M.Z., red. izd-va; SHIBKOVA, R.Ye., tekhn. red.

[Lumbering; land transportation of timber] Lesozagotovki; sukhoputnyi transport lesa. Spravochnik. Moskva, Goslesbumizdat, 1962. 504 p. (MIRA 16:7)
(Lumber—Transportation)

APPROVED FOR RELEASE: 08/23/2000 CIA-RDP86-00513R000929510010-4"

"APPROVED FOR RELEASE: 08/23/2000 CIA-RDP86-00513R000929510010-4

LEVER, I.I., referent

New types of heating furnaces. Metallurg 8 no.12:27-28 D '63. (MIRA 17:4)

APPROVED FOR RELEASE: 08/23/2000 CIA-RDP86-00513R000929510010-4"

"APPROVED FOR RELEASE: 08/23/2000 CIA-RDP86-00513R000929510010-4

BURKOVSKIY, Ye.; GEORGIYEVSKAYA, G.; LEVERTOV, V.; YUDIN, S.; VAL'TER, M., red.; INKIS, R., tekhn. red.

[Signaling of damages in overhead electric power distribution networks] Telesignalizatsiia povrezhdenii v vozdushnykh raspredelitel'nykh setiakh; energetika. Riga, TSentr. biuro tekhn. informatsii, 1962. 10 p. (MIRA 16:11)

(Electric lines—Overhead)
(Electric power distribution)

APPROVED FOR RELEASE: 08/23/2000 CIA-RDP86-00513R000929510010-4"

"APPROVED FOR RELEASE: 08/23/2000 CIA-RDP86-00513R000929510010-4

S/182/61/000/006/007/007
D038/D112

AUTHORS: Levertov, V.M., Mil'shteyn, D.S.

TITLE: Practical application of the follow-up system with an electric contact height finder

PERIODICAL: Kuznechno-shtampovochnoye proizvodstvo, no. 6, 1961, 46-47

TEXT: A device for the visual control of the position of the moving cross beam on presses has been in use at the Odesskiy zavod pressov (Odessa Press Plant) since 1958. The follow-up device comprises transmitting and receiver systems. The transmitting system includes a rack rigidly connected with the cross beam, gears, and a БД404А (BD404A) 110 v selsyn. The forward motion of the cross beam and of the rack is transmitted by the gears to the transmitting selsyn. The module is 0.5-1. The receiver system (Fig. 1) consists of a receiver selsyn (1), gears (2 and 3), and a scale indicator with an electric contact device (5). The rotation of the receiver selsyn is transmitted through the gears to an axle (4) and to the indicator hand (7). A БС404А (BS404A) 110 v receiver is used. The scale indicator (8) is calibrated for the cross beam displacement and has an electric contact device taken from an electric-contact pressure gage. It has two independent con-

Card 1/4

APPROVED FOR RELEASE: 08/23/2000 CIA-RDP86-00513R000929510010-4"

"APPROVED FOR RELEASE: 08/23/2000 CIA-RDP86-00513R000929510010-4

tacts (9). The motion of the cross beam is transmitted to the indicator hand through the follow-up system by a flag indicator (6). The receiving and transmitting selsyns are connected like an electric shaft (Fig. 2); tension of 110 v is taken from branches of a secondary winding of a T transformer (ТБС [TBS] 380/127 v transformer). The system works as follows (Fig. 2): when the cross beam is in the bottom position, the height-finder contacts (1-3 ЭКВ нач) are closed. Current is directed to the 1РП (1RP) relay which blocks itself by its contacts (3-5) and switches the cross beam drive on the other pair (1-11). The cross beam rises. The rotation of the transmitter is transmitted to the receiver selsyn. The indicator hand moves until the closing of the run end contacts (ЭКВ кон.). Contacts (1-7) switch on the 2РП (2RP) relay whose normally closed contacts (1-5) open the circuit of the relay 1RP. The 2RP relay blocks itself through the circuit (1-9-7-2). The work contacts (1-13) of the 2RP relay switch on the downward cross beam drive. The cycle ends when the cross beam reaches the bottom position, and the contacts (1-3) switch on the 1RP relay again. Relays of РП-0 (RP-0) or МКУ-48 (MKU-48)-type are recommended for these systems. The system is well-suited for remote control of presses. The indicator scale divisions are 1 mm. The contact system resetting is simple, as the operator can reset contacts on the control panel. There are 2 figures.

APPROVED FOR RELEASE: 08/23/2000 CIA-RDP86-00513R000929510010-4"

"APPROVED FOR RELEASE: 08/23/2000 CIA-RDP86-00513R000929510010-4

BRANDENBURGSKIY, M.G.; KOTLYARENKO, I.Ya.; LEVERTOV, V.M.

Automatic control of industrial processes on hydraulic presses with respect to the function of time. Kuz.-shtam.proizv. 5 no.5:22-27 My '63. (MIRA 16:9)

APPROVED FOR RELEASE: 08/23/2000 CIA-RDP86-00513R000929510010-4"

"APPROVED FOR RELEASE: 08/23/2000 CIA-RDP86-00513R000929510010-4

S/182/62/000/012/005/005
D040/D112

AUTHORS: Gol'khovoy, A.M. and Levertov, V.M.

TITLE: Application of electric-contact pressure gages in contactless control systems of hydraulic presses

PERIODICAL: Kuznechno-shtampovochnoye proizvodstvo, no.12, 1962, 34-36

TEXT: The use of magnetic logic elements is advocated in electric-contact pressure gages used extensively for the control and regulation of pressure in hydraulic presses. The advantages of magnetic logic elements, produced by the Kalininskiy zavod elektroapparatury (Kalinin Electric Instrument Plant), are stressed in comparison with the presently employed relay systems serving as intermediate links in the system, i.e. dependability, rapidity of operation (only one half-cycle of the feed current), low rate of wear of the contacts due to the very low input power of only up to 200 mw, and the convenience of assembly. The operation and the assembly of systems with magnetic logic memory elements is described and illustrated by circuit diagrams. The contacts of the electric-contact pressure gage serve as the input of the system, the output is made up of amplifiers, triodes and controlled diodes. There are 6 figures.

Card 1/1

APPROVED FOR RELEASE: 08/23/2000 CIA-RDP86-00513R000929510010-4"

"APPROVED FOR RELEASE: 08/23/2000 CIA-RDP86-00513R000929510010-4

GOL'KHOVOY, A.M.; LEVERTOV, V.M.

Use of electric contact manometers in diagrams of noncontact control of hydraulic presses. Kuz.-shtam.proizv. 4 no.12:34-36 D '62. (MIRA 16:1)

(Hydraulic presses) (Automatic control)

APPROVED FOR RELEASE: 08/23/2000 CIA-RDP86-00513R000929510010-4"

"APPROVED FOR RELEASE: 08/23/2000 CIA-RDP86-00513R000929510010-4

LEVERTOV, Ya.S., podpolkovnik meditsinskoy sluzhby

Treatment of obliterating endarteritis at the Kudepsta Sanatorium. Voen.-med. zhur. no. 6:82 Je '60. (MIRA 13:7)
(KUDEPSTA—ARTERIES—DISEASES)

APPROVED FOR RELEASE: 08/23/2000 CIA-RDP86-00513R000929510010-4"

"APPROVED FOR RELEASE: 08/23/2000 CIA-RDP86-00513R000929510010-4

LEVERTOVA, B.V.

Utilization of reclaimed wool in the manufacture of woolen cloth. Tekst. prom. no.2:21-23 F '63. (MIRA 16:4)

1. Rukovoditel' assortimentno-dessinatorskoy laboratorii Kompleksnogo nauchno-issledovatel'skogo instituta legkoy promyshlennosti Latviyskogo soveta narodnogo khozyaystva.

(Woolen and worsted manufacture)

APPROVED FOR RELEASE: 08/23/2000 CIA-RDP86-00513R000929510010-4"

"APPROVED FOR RELEASE: 08/23/2000 CIA-RDP86-00513R000929510010-4

LEVERTOVA, B.V.

More accurate calculation of the weight of worsted fabrics. Tekst. prom. 22 no.7:39 Jl '62. (MIRA 17:1)

1. Rukovoditel' assortimentno-dessinatorskoy laboratorii Kompleksnogo nauchno-issledovatel'skogo instituta legkoy promyshlennosti Latviyskogo soveta narodnogo khozyaystva.

APPROVED FOR RELEASE: 08/23/2000 CIA-RDP86-00513R000929510010-4"